WIRELESS LOAD SHACKLE
HF 55/LPT/WL

Application Field

- Evaluation of suspended load weights
- Measurement of tensile forces
- Various applications for all users requiring load-measuring shackles

Operating Principle:

Shear force measurement using strain gauges. The signal generated by the strain gauges is then processed by the associated electronics and transmitted wirelessly to the LCD display unit.



Technical specifications:

Capacity	: 65 -1500 kN (see below)
Sensor material	: Stainless steel 17-4 PH
Safety factor	: 5
Overload coefficient	: 2
Overall error	: +/- 1%
Wireless communication	: Radio
Frequency	: 2,4 GH
Range	: 100m (line of sight)
Shackle power supply	: 2 x CR123 (3V) battery
Display unit power supply	: Li-ion 3.7V (rechargeable)
Battery life	: +/- 80 hours
Display unit dimensions	: 205 x 95 x 30 mm
Operating temperature	: -20° to +60°
Shackle protection rating	: IP 65
Display unit protection rating	: IP65

PC Connection: USB (cable and software included)

Options:

Waterproof and shockproof carrying case

Models and characteristics:

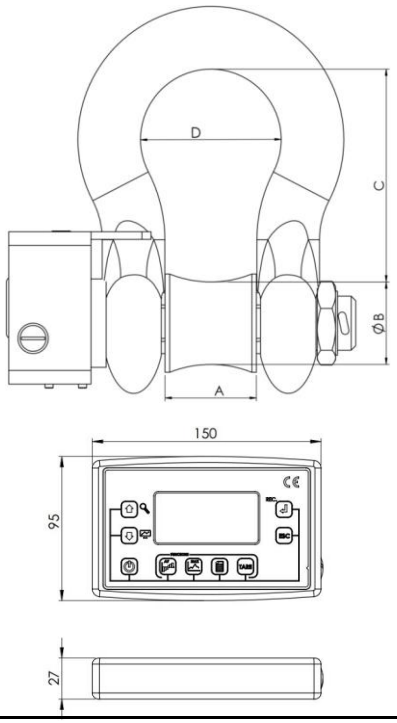

Models	Capacity* (kN)	Size	Dimensions (mm)			
			A	B	C	D
HF55/1/LPT/WL	65	7/8"	36,6	33,4	80	58
HF55/2/ LPT/WL	120	1" 1/4	51,5	43,1	115	82,5
HF55/3/ LPT/WL	250	1" 3/4	73	59	174	127
HF55/4/ LPT/WL	350	2"	82,5	65	193	146
HF55/5/ LPT/WL	550	2" 1/2	105	80	262	184
HF55/6/ LPT/WL	850	3	127	94,5	324	200
HF55/7/ LPT/WL	1200	3"1/2	133	107,7	364	229
HF55/8/ LPT/WL *	1500	4"	140	120	362	254