DYNAMOMETER
HF 97/LPT/WL/OLED

Application field:

- Evaluation of suspended load weights
- Measurement of tensile forces (in all positions)

Operating principle:

Tensile force measurement using strain gauges. The sensor directly undergoes the applied tension, and the resulting internal stresses are measured by the strain gauge bridge integrated into the dynamometer. The signal generated by the strain gauges is then processed by the associated electronics and transmitted via radio waves to the display unit.



Technical specifications :

Capacity	: 1.600 – 150.000 daN (see below)
Sensor material	: Aluminum
Safety factor	: 4
Admissible overload	: 150 %
Overall error	: +/- 0,2%
Communication	: Radio
Frequency	: 2,4 GH
Range	: 100m, line of sight
Dynamometer power supply	: 2 x CR123 (3v) batteries
Display power supply	: Li-ion 3,7V batteries
Dynamometer battery life	: +/- 80 hours
Operating temperature	:-20° to +60°
Dynamometer protection rating	: IP 65
Display protection rating	: IP65
PC connection	: via USB port

Models and characteristics:

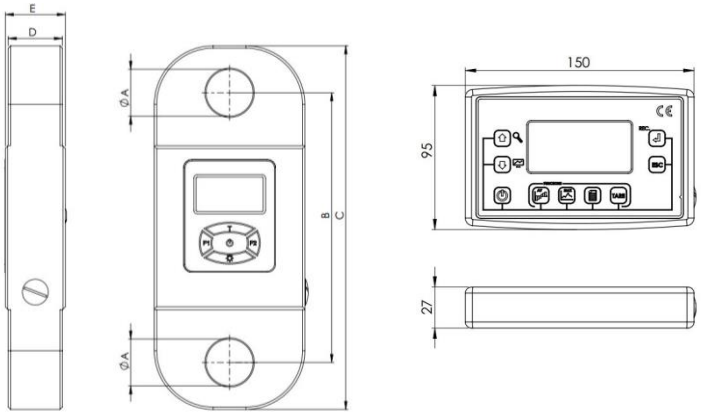

Models	Capacity (daN)	Dimensions (mm)					Weight (Kg)
		ØA	B	C	D	E	
HF97/1/LPT/WL	1600	22	180	230	19	35	1,1
HF97/2/LPT/WL	3200	22	180	230	19	35	1,3
HF97/3/LPT/WL	6500	26	204	255	34	39	2,3
HF97/4/LPT/WL	12500	40	230	310	46	51	4,2
HF97/5/LPT/WL	25000	53	267	370	70	75	9,1
HF97/6/LPT/WL	50000	73	301	450	98	90	16,8
HF97/7/LPT/WL	75000	86	330	530	98	90	26,5
HF97/8/LPT/WL	100000	99	390	670	118	110	50
HF97/9/LPT/WL	150000	112	440	750	130	122	68

TOWNLEY FORGING & ENGINEERING